A Mobile Technology Company

Mobile Surveillance Solution

© 2015-2016 ViPRO Corporation. All rights reserved.

MNR-360

4CH Mobile Network Video Recorder

www.vipro.com.tw

MNR-360 is a functional 4CH Mobile Network Video Recorder specially designed for vehicle surveillance solution and remote monitoring. It has a high-speed processor and embedded operating system, combining with the most advanced H.264 video compression /decompression technology, network, and GPS positioning technology. MNR-360 supports 720P video recording, vehicle travel information recording and wireless data upload. It is powerful with modular design, flexible installation, easy maintenance and high reliability.

Key Features

- Support 4CH 720P IP Camera
- Support 2.5” HDD storage
- Anti-vibration for 360 degree installation
- Built-in GPS for location tracking
- Built-in 3G/4G for live view and remote management
- Built-in WIFI for video files and alarm files download
- Support USB2.0 high speed backup
- Brand new GUI with supreme software performance

Dimensions

(unit: mm)

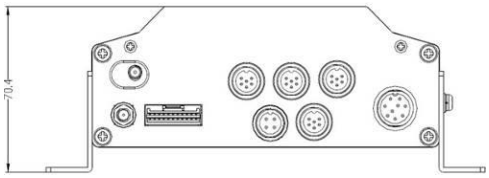

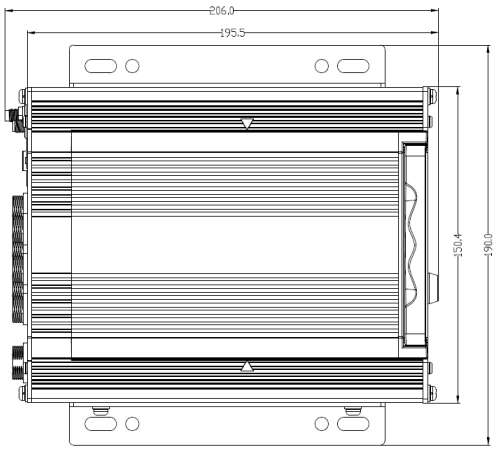

Optional Accessories

GPS module

WIFI module

3G/4GModule

CP4

Alarm Box & Sensor Box

UPS

Transfer Cable

Din Cable

LED Panel

Lock Box

GDS

Fireproof Box

Easy Check

Technical Specifications

Product series		MNR-360
Overview		Preview, Record, Playback, Network, Locate
System	OS	Linux 3.0.8
	Control Mode	Mouse, Network, Easy Check (3G/4G/WIFI)
Video	Input	4 channels 720P
	Output	1 channel
	Total Resource	120fps @ 720P
	Video Signal Standard	Electrical level: 1Vpp Impedance : 75Ω NTSC/PAL Optional
Audio	Input	4 channel
	Output	1 channel
	Audio Signal Standard	Electrical level: 2Vpp Input impedance: 4.7kΩ
Display	Display Split	1/4
	OSD	GPS information, alarm, vehicle number, speed, date/time
	Operation	Semi-transparent GUI
Recording	Video/Audio Compression	Video: H.264 Audio:ADPCM
	Image Resolution	720P(1280x720)
	Image Quality	1~8 levels adjustable (1 is the best)
	Record Mode	Boot up/Manual/schedule/Alarm
	Pre-recording	0 ~ 60 minutes
	Post-recording	0 ~ 30 minutes
Playback	Playback Channel	1 channel by local playback
	Search Mode	Date/time, channel, event
Network	IPC Ethernet	6-pin DJ (100M x 1, PON power supply)
	WIFI	802.11b/g/n (optional)
	3G/4G	EVDO/WCDMA/TDD-LTE/FDD-LTE (optional)
Locating	GPS	location tracking, speed detection, and sync time (Optional)
Storage	Hard Disk	2.5” SATA HDD x 1
Interface	USB	USB 2.0 x 1
	RS232	RS232 x 1
	Sensor	8 inputs, 2 outputs
	Speed	1 channel pulse speed detection
	Intercom	1 MIC interface
	Panel	CP4 (The multi-functional panel) optional
Electrical	Input	DC8~36V, ignition signal
	Output	5V@1A
	Power consumption	26W (Maximum) ≈0W (Standby)
Mechanical	Dimension	206.0x190.0x70.4mm/8.11”x7.48”x2.772”
	Weight	1.24kg / 2.734lbs
Environmental	Operating Temperature	-40℃~70℃ / -40℉~158℉(with heater) -10℃~70℃ / -14℉~158℉ @ RH 8%~90% (No Condense)
PC Software		VMS II
Certifications	EU / USA	CE, FCC

© 2015-2016 ViPRO Corporation
Data subject to change without prior notice.

MVR-210

5CH Hybrid Mobile Digital Video Recorder

www.vipro.com.tw

MVR-210 is an economic 5CH Hybrid Mobile Digital Video Recorder specially designed for vehicle surveillance solution and remote monitoring. It has a high-speed processor and embedded operating system, combining with the most advanced H.264 video compression /decompression technology and GPS positioning technology. MVR-210 supports video recording in 720P, WD1, HD1 and CIF formats, vehicle travel information recording and local playback & analysis. It is powerful with flexible installation, easy maintenance and high reliability.

Key Features

- Support 4CH WD1 + 1CH 720P IP
- Support Dual SD cards for recording (up to 256GB)
- Anti-vibration for 360 degree installation
- Built-in GPS for location tracking
- Support USB2.0 high speed backup
- Support data recovery technology

Dimensions

(unit: mm)

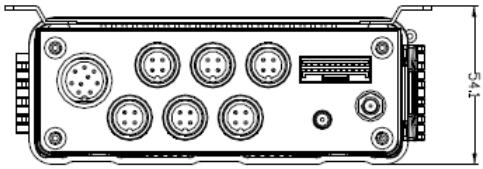

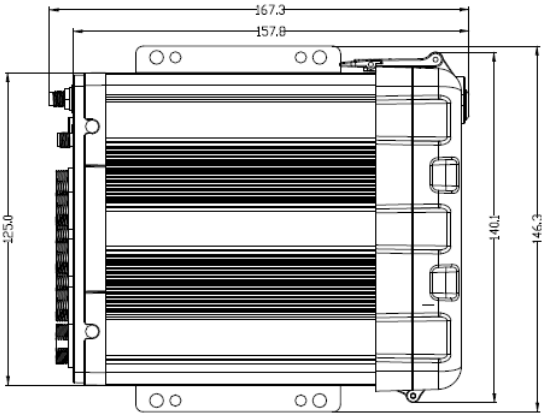

Optional Accessories

GPS module

CP4

Alarm Box & Sensor Box

I/O&RS232Box

UPS

Transfer Cable

Din Cable

LED Panel

Lock Box

GDS

Fireproof Box

Easy Check

Technical Specifications

Product series		MVR-210
Overview		Preview, Record, Playback, Locate
System	OS	Linux 3.0.8
	Control Mode	Mouse, CP4, Easy Check
Video	Input	4 channels WD1 + 1 channel 720P
	Output	1 channel
	Total Resource	100/120fps @ WD1 + 30fps @720P
	Video Signal Standard	Electrical level: 1Vpp Impedance : 75Ω NTSC/PAL Optional
Audio	Input	5 channels (1 channel IPC audio input)
	Output	1 channel
	Audio Signal Standard	Electrical level: 2Vpp Input impedance: 4.7kΩ
Display	Display Split	1/4/9
	OSD	GPS information, alarm, vehicle number, speed, date/time
	Operation	Semi-transparent GUI
Recording	Video/Audio Compression	Video: H.264 Audio:ADPCM
	Image Resolution	Analog: PAL: WD1(928x576),WHD1(928x288),WCIF(464x288), D1(704x576),HD1(704x288), CIF(352x288); NTSC:WD1(928x480),WHD1(928x240),WCIF(464x240), D1(704x480),HD1(704x240),CIF(352x240); Digital:720P(1280x720)
	Image Quality	1~8 levels adjustable (1 is the best)
	Record Mode	Boot up/Manual/schedule/Alarm
	Pre-recording	0 ~ 60 minutes
	Post-recording	0 ~ 30 minutes
	Mirror/Dual record	Support
Playback	Playback Ch	1 channel by local playback
	Search Mode	Date/time, channel, event
Ethernet	IPC Ethernet	6-pin DJ (100M x 1, PON power supply)
Locating	GPS	location tracking, speed detection, and sync time (Optional)
Storage	SD card	SD Card x 2 (up to 128GB/each)
Interface	USB	USB 2.0 x 1
	RS232	RS232 x 1
	Sensor	8 inputs, 2 outputs
	Speed	1 channel pulse speed detection
	Intercom	1 MIC interface
	Panel	CP4 (The multi-functional panel) optional
Electrical	Input	DC8~36V, ignition signal
	Output	5V@500mA
	Power consumption	29W (Maximum) ≈0W (Standby)
Mechanical	Waterproof	IP54
	Dimension	167.3x146.3x54.1mm/6.58”x5.76”x2.13”
	Weight	0.83.kg / 1.83lbs
Environmental	Operating Temperature	-40℃~70℃ / -40℉~158℉(with heater) -10℃~70℃ / -14℉~158℉ @ RH 8%~90% (No Condense)
PC Software		VMS II
Certifications	EU / USA	CE, FCC

© 2015-2016 ViPRO Corporation

MVR-215

5CH Hybrid Mobile Digital Video Recorder

www.vipro.com.tw

MVR-215 is a functional 5CH Hybrid Mobile Digital Video Recorder specially designed for vehicle surveillance solution and remote monitoring. It has a high-speed processor and embedded operating system, combining with the most advanced H.264 video compression /decompression technology, network, and GPS positioning technology. MVR-215 supports video recording in 720P, WD1, HD1 and CIF formats, vehicle travel information recording and wireless data upload. It is powerful with modular design, flexible installation, easy maintenance and high reliability.

Key Features

- Support 4CH WD1 + 1CH 720P IP
- Support Dual SD cards for recording
- Anti-vibration for 360 degree installation
- Built-in GPS for location tracking
- Built-in 3G/4G for live view and remote management
- Built-in WIFI for video files and alarm files download
- Support USB2.0 high speed backup
- Support data recovery technology

Dimensions

(unit: mm)

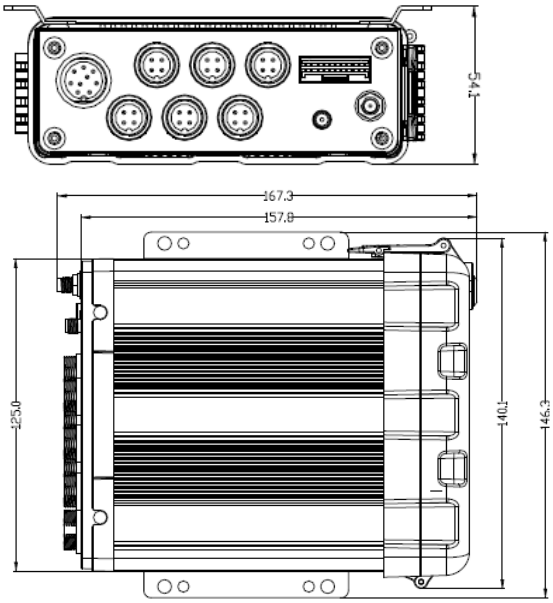

Optional Accessories

GPS module

WIFI module

3G/4GModule

CP4

Alarm Box & Sensor Box

UPS

Transfer Cable

Din Cable

LED Panel

Lock Box

GDS

Fireproof Box

Easy Check

*MVR-215 can be built in with GPS+3G/4G or GPS+WIFI modules.

Technical Specifications

Product series		MVR-215
Overview		Preview, Record, Playback, Network, Locate
System	OS	Linux 3.0.8
	Control Mode	Mouse, Network (3G/4G/WIFI), Easy Check
Video	Input	4 channels WD1 + 1 channel 720P
	Output	1 channel
	Total Resource	100/120fps @ WD1 + 30fps @720P
	Video Signal Standard	Electrical level: 1Vpp Impedance : 75Ω NTSC/PAL Optional
Audio	Input	5 channels (1 channel IPC audio input)
	Output	1 channel
	Audio Signal Standard	Electrical level: 2Vpp Input impedance: 4.7kΩ
Display	Display Split	1/4/9
	OSD	GPS information, alarm, vehicle number, speed, date/time
	Operation	Semi-transparent GUI
Recording	Video/Audio Compression	Video: H.264 Audio:ADPCM
	Image Resolution	Analog: PAL: WD1(928x576),WHD1(928x288),WCIF(464x288), D1(704x576),HD1(704x288), CIF(352x288); NTSC:WD1(928x480),WHD1(928x240),WCIF(464x240), D1(704x480),HD1(704x240),CIF(352x240); Digital:720P(1280x720)
	Image Quality	1~8 levels adjustable (1 is the best)
	Record Mode	Boot up/Manual/schedule/Alarm
	Pre-recording	0 ~ 60 minutes
	Post-recording	0 ~ 30 minutes
Playback	Playback Channel	1 channel by local playback
	Search Mode	Date/time, channel, event
Network	IPC Ethernet	6-pin DJ (100M x 1, PON power supply)
	WIFI	802.11b/g/n (optional)
	3G/4G	EVDO/WCDMA/TDD-LTE/FDD-LTE (optional)
Locating	GPS	location tracking, speed detection, and sync time (Optional)
Storage	SD card	SD Card x 2
Interface	USB	USB 2.0 x 1
	RS232	RS232 x 1
	Sensor	8 inputs, 2 outputs
	Speed	1 channel pulse speed detection
	Intercom	1 MIC interface
	Panel	CP4 (The multi-functional panel) optional
Electrical	Input	DC8~36V, ignition signal
	Output	5V@1A
	Power consumption	29W (Maximum) ≈0W (Standby)
Mechanical	Waterproof	IP54
	Dimension	167.3x146.3x54.1mm/6.58”x5.76”x2.13”
	Weight	0.83.kg / 1.83lbs
Environmental	Operating Temperature	-40℃~70℃ / -40℉~158℉(with heater) -10℃~70℃ / -14℉~158℉ @ RH 8%~90% (No Condense)
PC Software		VMS II
Certifications	EU / USA	CE, FCC

© 2015-2016 ViPRO Corporation
Data subject to change without prior notice.

MVR-315

5CH Hybrid Mobile Digital Video Recorder

www.vipro.com.tw

MVR-315 is a functional 5CH Hybrid Mobile Network Video Recorder specially designed for vehicle surveillance solution and remote monitoring. It has a high-speed processor and embedded operating system, combining with the most advanced H.264 video compression /decompression technology, network, and GPS positioning technology. MVR-315 supports video recording in 720P, WD1, HD1 and CIF formats, vehicle travel information recording and wireless data upload. It is powerful with modular design, flexible installation, easy maintenance and high reliability.

Key Features

- Support 4CH WD1 + 1CH 720P IP
- Support 2.5" HDD storage
- Anti-vibration for 360 degree installation
- Built-in GPS for location tracking
- Built-in 3G/4G for live view and remote management
- Built-in WIFI for video files and alarm files download
- Support USB2.0 high speed backup
- Support data recovery technology

Dimensions

(unit: mm)

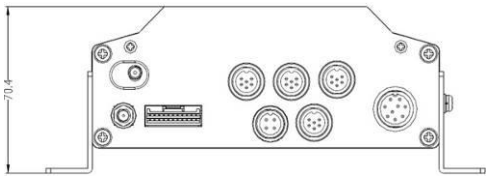

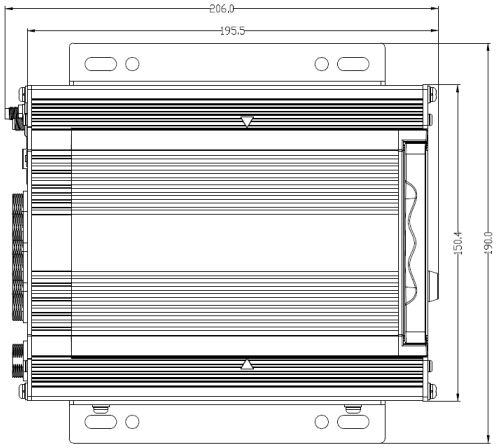

Optional Accessories

GPS module

WIFI module

3G/4GModule

Control Panel

Alarm Box & Sensor Box

UPS

Transfer Cable

Din Cable

LED Panel

Lock Box

GDS

Fireproof Box

Easy Check

*MVR-315 can be built in with GPS+3G/4G or GPS+WIFI modules.

Technical Specifications

Product series		MVR-315
Overview		Preview, Record, Playback, Network, Locate
System	OS	Linux 3.0.8
	Control Mode	Mouse, Network (3G/4G/WIFI), Easy Check
Video	Input	4 channels WD1 + 1 channel 720P
	Output	1 channel
	Total Resource	100/120fps @ WD1 + 30fps @ 720P
	Video Signal Standard	Electrical level: 1Vpp Impedance : 75Ω NTSC/PAL Optional
Audio	Input	5 channels (1channel IPC audio input)
	Output	1 channel
	Audio Signal Standard	Electrical level: 2Vpp Input impedance: 4.7kΩ
Display	Display Split	1/4/9
	OSD	GPS information, alarm, vehicle number, speed, date/time
	Operation	Semi-transparent GUI
Recording	Video/Audio Compression	Video: H.264 Audio:ADPCM
	Image Resolution	Analog: PAL: WD1(928x576),WHD1(928x288),WCIF(464x288), D1(704x576),HD1(704x288), CIF(352x288); NTSC:WD1(928x480),WHD1(928x240),WCIF(464x240), D1(704x480),HD1(704x240),CIF(352x240); Digital:720P(1280x720)
	Image Quality	1~8 levels adjustable (1 is the best)
	Record Mode	Boot up/Manual/schedule/Alarm
	Pre-recording	0 ~ 60 minutes
	Post-recording	0 ~ 30 minutes
Playback	Playback Channel	1 channel by local playback
	Search Mode	Date/time, channel, event
Network	IPC Ethernet	6-pin DJ (100M x 1, PON power supply)
	WIFI	802.11b/g/n (optional)
	3G/4G	EVDO/WCDMA/TDD-LTE/FDD-LTE (optional)
Locating	GPS	location tracking, speed detection, sync time
Storage	Hard Disk	2.5" SATA HDD x 1
Interface	USB	USB 2.0 x 1
	RS232	RS232 x 1
	Sensor	8 inputs, 2 outputs
	Speed	1 channel pulse speed detection
	Intercom	1 MIC interface
Electrical	Input	DC8~36V, ignition signal
	Output	5V@1A
	Power consumption	32W (Maximum) ≈0W (Standby)
Mechanical	Dimension	206.0x190.0x70.4mm/8.11"x7.48"x2.772"
	Weight	1.24kg / 2.734lbs
Environmental	Operating Temperature	-40℃~70℃ / -40℉~158℉(with heater) -10℃~70℃ / -14℉~158℉@ RH 8%~90%
PC Software		VMS II
Certifications	EU / USA	CE, FCC

© 2015-2016 ViPRO Corporation
Data subject to change without prior notice. | en, v11-01. Jan, 2015

MVR-606-2IP

6CH Hybrid Mobile Digital Video Recorder

www.vipro.com.tw

MVR-606-2IP is an advanced 6CH Hybrid Mobile Digital Video Recorder specially designed for vehicle surveillance solution and remote monitoring. It has a high-speed processor and embedded operating system, combining with the most advanced H.264 video compression /decompression technology, network, and GPS positioning technology. MVR-606-2IP supports video recording in 720P, WD1, HD1 and CIF formats, vehicle travel information recording and wireless data upload. With center software it also achieves alarm linkage central monitoring, remote management and playback analysis. It is powerful with modular design, flexible installation, easy maintenance and high reliability.

Key Features

- Support 4CH WD1+2CH 720P IP
- Rugged metal and modular design for easy maintenance
- Support 2.5” HDD storage and SD card for mirror recording
- Dual streams for local recording and wireless transmission
- Built-in GPS for location tracking*
- Built-in 3G/4G for live view and remote management*
- Built-in WIFI for video files and alarm files download*
- Brand new GUI with supreme software performance

Dimensions

(unit: mm)

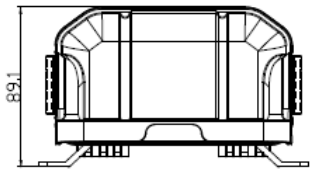

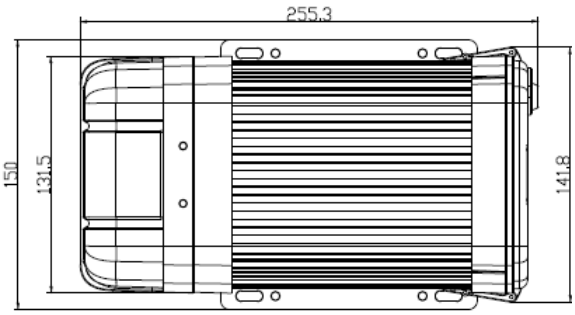

Optional Accessories

GPS module

WIFI module

3G/4G Module

CP4

Alarm Box Sensor Box

UPS

Transfer Cable

Din Cable

LED Panel

Lock Box

GDS

Fireproof Box

Control Panel

Easy Check

Technical Specifications

Product series		MVR-606-2IP
Overview		Preview, Record, Playback, Network, Locate
System	OS	Linux 3.0.8
	Control Mode	Mouse, Network, Easy Check, CP4
Video	Input	4 channels WD1 + 2 channels 720P
	Output	1 channel
	Total Resource	100/120fps @ WD1 + 60fps @ 720P
	Video Signal Standard	Electrical level: 1Vpp Impedance : 75Ω NTSC/PAL Optional
Audio	Input	6 channels (incl. IPC x 2)
	Output	1 channel
	Audio Signal Standard	Electrical level: 2Vpp Input impedance: 4.7kΩ
Display	Display Split	1/4/9
	OSD	GPS information, alarm, vehicle number, speed, date/time
	Operation	Semi-transparent GUI
Recording	Video/Audio Compression	Video: H.264 Audio:ADPCM, G.711A, G.711U
	Image Resolution	Analog: PAL:WD1(928x576),WHD1(928x288),WCIF(464x288), D1(704x576),HD1(704x288), CIF(352x288) NTSC:WD1(928x480).WHD1(928x240),WCIF(464x240), D1(704x480),HD1(704x240), CIF(352x240) Digital:720P(1280x720)
	Image Quality	1~8 levels adjustable (1 is the best)
	Record Mode	Boot up/Manual/schedule/Alarm (sensor trigger, speed, acceleration, video loss, temperature)
	Pre-recording	0 ~ 60 minutes
	Post-recording	0 ~ 30 minutes
Playback	Mirror/Dual Recording	Yes
	Playback Channel	1 channel by local playback
	Search Mode	Date/time, channel, event
Network	Ethernet	RJ45 port (100M) x1
	IPC Ethernet	6-pin DJ (100M x 2, PON power supply)
	WIFI	802.11b/g/n (optional)
	3G/4G	EVDO/WCDMA/TDD-LTE/FDD-LTE (single module supported) (optional)
Locating	GPS	location tracking, speed detection and sync time
Storage	Hard Disk	2.5” SATA HDD x 1 (up to 2TB)
Interface	USB	USB 2.0 x 2 (1 for mirror record, 1 for easy check)
	SD	SD x 1
	RS232/RS485	RS232 x 2 / RS485 x 2
	Sensor	8 inputs, 2 outputs
	Serial	G-sensor (internal)
	Speed	1 channel pulse speed detection
	Panel	CP4 (The multi-functional panel) optional
Electrical	Input	DC8~36V
	Output	12V@1A, 5V@1A
Mechanical	Dimension	255.3 x 150 x 89.1mm / 10.05” x 5.906” x 3.508”
	Weight	2.2kg / 4.85lbs
Environmental	Operating Temperature	-40℃~70℃ / -40℉~158℉(with heater) -10℃~70℃ / -14℉~158℉@ RH 8%~90%
Others	Waterproof	IP54
PC Software		VMS II
Certifications	EU / USA	CE, FCC

© 2015-2016 ViPRO Corporation

MVR-606-4IP

6CH Hybrid Mobile Digital Video Recorder

www.vipro.com.tw

MVR-600 series are professional 6CH Hybrid Mobile Digital Video Recorders specially designed for vehicle surveillance solution and remote monitoring. It has a high-speed processor and embedded operating system, combining with the most advanced H.264 video compression/decompression technology, network, and GPS positioning technology. MVR-600 supports video recording in 720P, WD1, HD1 and CIF formats, vehicle travel information recording and wireless data upload. With center software it also achieves alarm linkage central monitoring, remote management and playback analysis. It is powerful with modular design, flexible installation, easy maintenance and high reliability.

Key Features

- Support 2CH WD1+4CH 720P IP
- Rugged metal and modular design for easy maintenance
- Support 2.5" HDD storage and SD card for mirror recording
- Dual streams for local recording and wireless transmission
- Built-in GPS for location tracking*
- Built-in 3G/4G for live view and remote management*
- Built-in WIFI for video files and alarm files download*
- Brand new GUI with supreme software performance

Dimensions

(unit: mm)

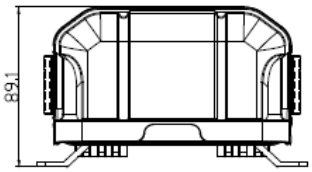

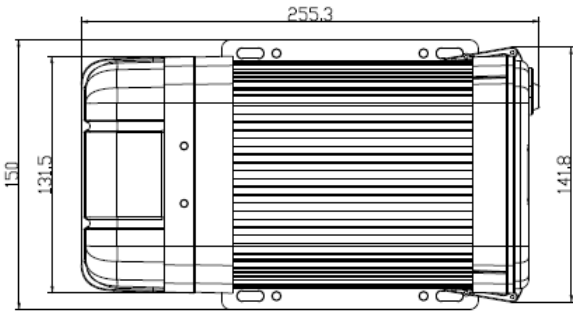

Optional Accessories

GPS module

WIFI module

3G/4G Module

CP4

Alarm Box Sensor Box

UPS

Transfer Cable

Din Cable

LED Panel

Lock Box

GDS

Fireproof Box

Control Panel

Easy Check

Technical Specifications

Product series		MVR-606-4IP
Overview		Preview, Record, Playback, Network, Locate
System	OS	Linux 3.0.8
	Control Mode	Mouse, Network, Easy Check, CP4
Video	Input	2 channels WD1 + 4channels 720P
	Output	1 channel
	Total Resource	50/60fps @ WD1 + 120fps @ 720P
	Video Signal Standard	Electrical level: 1Vpp Impedance : 75Ω NTSC/PAL Optional
Audio	Input	6 channels (incl. IPC x 4)
	Output	1 channel
	Audio Signal Standard	Electrical level: 2Vpp Input impedance: 4.7kΩ
Display	Display Split	1/4/9
	OSD	GPS information, alarm, vehicle number, speed, date/time
	Operation	Semi-transparent GUI
Recording	Video/Audio Compression	Video: H.264 Audio:ADPCM, G.711A, G.711U
	Image Resolution	Analog: PAL:WD1(928x576),WHD1(928x288),WCIF(352x288), D1(704x576),HD1(704x288), CIF(352x288) NTSC:WD1(928x480).WHD1(928x240),WCIF(464x240), D1(704x480),HD1(704x240), CIF(352x240) Digital:720P(1280x720)
	Image Quality	1~8 levels adjustable (1 is the best)
	Recor Mode	Boot up/Manual/schedule/Alarm (sensor trigger, speed, acceleration, video loss, temperature)
	Pre-recording	0 ~ 60 minutes
	Post-recording	0 ~ 30 minutes
	Mirror/Dual Recording	Yes
Playback	Playback Channel	1 channel by local playback
	Search Mode	Date/time, channel, event
Network	Ethernet	RJ45 port (100M) x1
	IPC Ethernet	6-pin DJ (100M x 4, PON power supply)
	WIFI	802.11b/g/n (optional)
	3G/4G	EVDO/WCDMA/TDD-LTE/FDD-LTE (single module supported)
Locating	GPS	location tracking, speed detection and sync time
Storage	Hard Disk	2.5" SATA HDD x 1 (up to 2TB)
Interface	USB	USB 2.0 x 1 (1 for mirror record, 1 for easy check)
	SD	SD x 1
	RS232/RS485	RS232 x 2 / RS485 x 2
	Sensor	8 inputs, 2 outputs
	Serial	G-sensor (internal)
	Speed	1 channel pulse speed detection
	Panel	CP4 (The multi-functional panel) optional
Electrical	Input	DC8~36V
	Output	12V@1A, 5V@1A
Mechanical	Dimension	255.3 x 150 x 89.1mm / 10.05" x 5.906" x 3.508"
	Weight	2.2kg / 4.85lbs
Environmental	Operating Temperature	-40℃~70℃ (with heater) or -10℃~70℃ @ RH 8%~90% (No Condense)
Others	Waterproof	IP54
PC Software		VMS II
Certifications	EU / USA	CE, FCC

© 2015-2016 ViPRO Corporation
Data subject to change without prior notice. | en, v11-01. Jan, 2015

MVR-612

12CH Hybrid Mobile Digital Video Recorder

www.vipro.com.tw

MVR-612 is an advanced 12CH Hybrid Mobile Digital Video Recorder specially designed for vehicle surveillance solution and remote monitoring at high-definition video quality. It has a high-speed processor and embedded operating system, combining with the most advanced H.264 video compression /decompression technology, network, and GPS positioning technology.
MVR-612 supports video recording in 720P, WD1, HD1 and CIF formats, vehicle travel information recording and wireless data upload. With center software it also achieves alarm linkage central monitoring, remote management and playback analysis. It is powerful with modular design, flexible installation, easy maintenance and high reliability.

Key Features

- Support 8CH WD1+4CH 720P IP or 4CH WD1+8CH 720P IP
- Modular design for easy maintenance
- Anti-vibration design for 360 degree installation
- Support 2.5" HDD storage and SD card for mirror recording
- Dual streams for local recording and wireless transmission
- Built-in GPS for location tracking
- Built-in 3G/4G for live view and remote management
- Built-in WIFI for video files and alarm files download
- Built-in inertia sensor
- Built-in heater

Dimensions

(unit: mm)

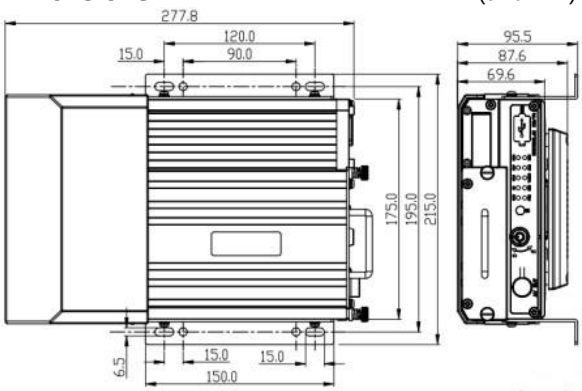

Optional Accessories

GPS module

WIFI module

3G/4GModule

CP4

Alarm Box Sensor Box

UPS

Transfer Cable

Din Cable

LED Panel

Lock Box

GDS

Fireproof Box

Control Panel

Easy Check

Technical Specifications

Product series		MVR-612
Overview		Preview, Record, Playback, Network, Locate
System	OS	Linux 3.0.8
	Control Mode	Mouse, Network, Easy Check, CP4
Video	Input	8 channels WD1 + 4 channels 720P IP or 4 channels WD1 + 8 channels 720P IP
	Output	2 channels
	Total Resource	200/240fps @ WD1 + 120fps @ 720P or 100/120fps @ WD1 + 240 fps 720P
	Video Signal Standard	Electrical level: 1Vpp Impedance : 75Ω NTSC/PAL Optional
Audio	Input	12 channels (incl. IPC x 4)
	Output	2 channels
	Audio Signal Standard	Electrical level: 2Vpp Input impedance: 4.7kΩ
Display	Display Split	1/4/9
	OSD	GPS/BD information, alarm, temperature, acceleration, voltage, device information, software version, MCU version, network status
	Operation	Semi-transparent GUI
Recording	Video/Audio Compression	Video: H.264 Audio:ADPCM
	Image Resolution	Analog: PAL:WD1(928x576),WHD1(928x288),WCIF(464x288), D1(704x576),HD1(704x288), CIF(352x288) NTSC:WD1(928x480).WHD1(928x240),WCIF(464x240), D1(704x480),HD1(704x240), CIF(352x240) Digital:720P(1280x720)
	Image Quality	1~8 levels adjustable (1 is the best)
	Record Mode	Boot up/Manual/schedule/Alarm (sensor trigger, speed, acceleration, video loss, temperature)
	Pre-recording	0 ~ 60 minutes
	Post-recording	0 ~ 30 minutes
	Mirror/Dual Recording	Yes
Playback	Playback Ch	1/4 channels by local playback
	Search Mode	Date/time, channel, event
Network	Ethernet	RJ45 port (100M) x1
	IPC Ethernet	6-pin DJ (100M x 2, PON power supply)
	WIFI	802.11b/g/n (optional)
	3G/4G	EVDO/WCDMA/TDD-LTE/FDD-LTE
Locating	GPS	location tracking, speed detection and sync time
Storage	Hard Disk	2.5" SATA HDD x 1 (up to 2TB)
Interface	USB	USB 2.0 x 2
	SD	SD x 1
	RS232/RS485	RS232 x 2 / RS485 x 2
	Sensor	8 inputs, 2 outputs
	Serial	G-sensor (internal)
	Speed	1 channel pulse speed detection
	Panel	CP4 (The multi-functional panel) optional
Electrical	Input	DC8~36V
	Output	12V@1A, 5V@1A
Mechanical	Dimension	277.8 x 215 x 95.5mm / 10.94" x 8.465" x 3.76"
	Weight	2.8kg / 6.173lbs
Environmental	Operating Temperature	-40℃~70℃ / -40℉~158℉(with heater) -10℃~70℃ / -14℉~158℉@ RH 8%~90%
Others	Waterproof	IP54
PC Software		VMS II
Certifications	EU / USA	CE, FCC

© 2015-2016 ViPRO Corporation
Data subject to change without prior notice.

MVR-624

24CH Hybrid Mobile Digital Video Recorder

www.vipro.com.tw

MVR-624 is an advanecd and feature-rich 24CH Hybrid Mobile Digital Video Recorder for vehicle surveillance and intelligent dispatch. Adopting high-speed processor, H.264 codec, network and GPS positioning technology, MVR-624 also supports dynamic coding technology to adjust the dynamic change of 4G/3G network bandwidth and ensure the fluency of monitoring video.

It can realize 720P, WD1, HD1 and CIF formats, vehicle travel information recording and remote video upload. With center software it achieves alarm central monitoring, vehicle intelligent dispatching management and playback analysis. It is powerful with anti-vibration and full metal design, flexible installation, easy maintenance and high reliability.

Key Features

- Support 16CH WD1 + 8CH 720P IP Camera
- Modular design for easy maintenance
- Anti-vibration design for 360 degree installation
- Support 2.5" HDD storage and SD card for mirror recording
- Triple stream technology
- Built-in GPS for location tracking
- Built-in 3G/4G for live view and remote management
- Built-in WIFI for video files and alarm files download
- 24-hour single-file recording mode

Dimensions

(unit: mm)

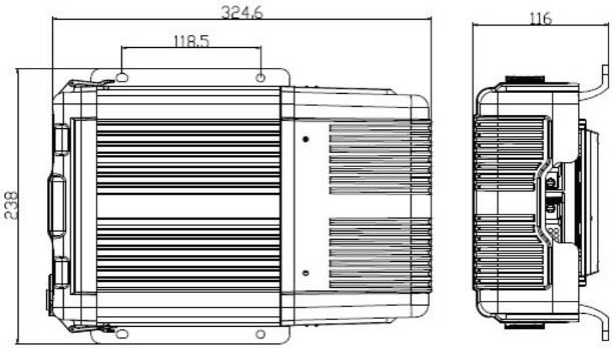

Optional Accessories

GPS module

WIFI module

3G/4G Module

CP4

Alarm Box Sensor Box

UPS

Transfer Cable

Din Cable

Lock Box

6-Axis Sensor

Fireproof Box

LEDPanel

Easy Check

POE

Control Panel

Technical Specifications

Product series		MVR-624
Overview		Preview, Record, Playback, Network, Locate
System	OS	Linux 3.0.8
	Control Mode	Mouse, Network, Easy Check, CP4
Video	Input	16 channels WD1 + 8 channels 720P IPC
	Output	3 channels
	Total Resource	400/480fps @ WD1 + 240fps @ 720P
	Video Signal Standard	Electrical level: 1Vpp Impedance : 75Ω NTSC/PAL Optional
Audio	Input	24 channels (incl. IPC x 8)
	Output	3 channels
	Audio Signal Standard	Electrical level: 2Vpp Input impedance: 4.7kΩ
Display	Display Split	1/4/9
	OSD	Locate, alarm, vehicle number, speed, date/time
	Operation	Graphical User Interface
Recording	Video/Audio Compression	Video: H.264 Audio:ADPCM, G.711U, G.711A
	Image Resolution	Analog: PAL:WD1(928x576),WHD1(928x288),WCIF(464x288), D1(704x576),HD1(704x288), CIF(352x288) NTSC:WD1(928x480).WHD1(928x240),WCIF(464x240), D1(704x480),HD1(704x240), CIF(352x240) Digital:720P(1280x720)
	Image Quality	1~8 levels adjustable (1 is the best)
	Record Mode	Boot up/Manual/schedule/Alarm (sensor trigger, speed, acceleration, video loss, alarm button)
	Pre-recording	0 ~ 60 minutes
	Post-recording	0 ~ 30 minutes
	Mirror Record	Yes
Playback	Playback	1/4 channels by local playback
	Search Mode	Date/time, channel, event
Network	Ethernet	RJ45 port (1000M) x2
	WIFI	802.11b/g/n (optional)
	3G/4G	EVDO/WCDMA/TDD-LTE/FDD-LTE
Locating	GPS	location tracking, speed detection and sync time
Storage	Hard Disk	2.5" SATA HDD x 2
Interface	USB	USB 2.0 x 2 (at front and rear panel each)
	SD	SD x 1
	Sensor	8 inputs, 2 outputs
	Serial	Serial port (DB26) x 1, 3Pin debugging serial port x 1
	Speed	1 channel pulse speed detection
	Panel	CP4 (The multi-functional panel) optional
Electrical	Input	DC8~36V
	Output	12V@1A, 5V@1A
	Current	Impulse current: input 13.5V@10A Working current: input 13.5V@5A input 27V@2.5A ; Standby current: 0A
Mechanical	Dimension	324.6 x 238 x 116mm / 12.78" x 9.37" x 4.56"
	Weight	4.2kg / 9.26lbs
Environmental	Temperature & Humidity	-40℃~70℃ / -40℉~158℉(with heater) -10℃~70℃ / -14℉~158℉@ RH 8%~90%
PC Software		VMS II
Certifications	EU / USA	CE, FCC, MIL-STD-810F

© 2015-2016 ViPRO Corporation
Data subject to change without prior notice.

N61

720P Mobile IP Camera

www.vipro.com.tw

***N61** is the Outdoor IP camera specially designed for vehicle monitoring environment with high-speed processor and embedded operation system, combining H.264 video compression and decompression technology, network technology. Featuring high-definition (1280x720) image quality, N61 supports triple streams for better network transmission while its smart design is very convenient for installation and maintenance.*

Key Features

- Support 1280x720@30fps HD resolution
- Day/Night(ICR), Digital Noise Filter, Super Wide Dynamic Range, Auto White Light Compensation
- High speed, long distance real time transmission
- Three stream technology, phone monitoring
- IP66 waterproof and dustproof
- Anti-vibration, vandal resistant
- Built-in power loss protection
- PON(DC 12V)/POE(48V)
- H.264 audio and video coding standard
- Support multiple network protocols
- Ideal for vehicle video surveillance

Dimension

(unit: mm)

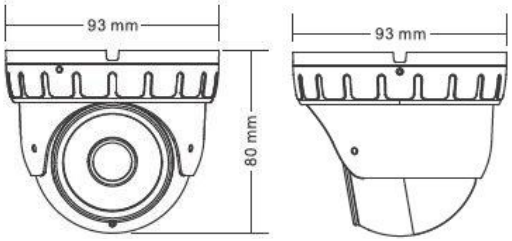

Application

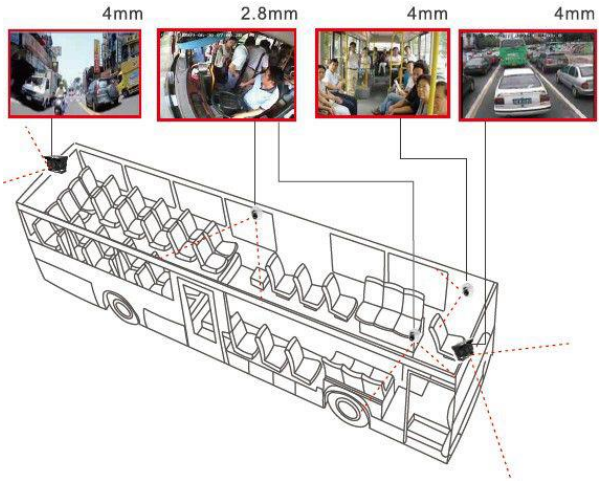

Technical Specifications

Product series	720P Mobile IP Camera	
	Model Name	N61
Video	Image Sensor	1/3” CMOS SONY IMX238
	Resolution	1280*720
	Signal System	50/60 Hz
	Minimum Illumination	0.05Lux(Color Illumination), F1.2
	Electronics Shutter	1/25 Sec – 1/10000 Sec
	Day/Night	IR-CUT
	Wide Dynamic Range	Digital Wide Dynamic Range
	Backlight Compensation	Support
	S/N	≥40db
	Wide Dynamic Range	≥80db
	IR	<8m
Optical Lens	Port	6-pin DJ M12(PON)/RJ45(POE)
	Aperture	Fixed aperture F1.8
	Lens	2.8mm, 4mm, 6mm, 8mm Optional
Audio/Video Encode	Video Compression	H.264
	Compression Output Rate	768Kbps-6144Kbps
	Image Resolution	Main Stream:720p @30fps, Network Sub Stream:VGA @25fps Record Sub Stream:VGA @ 30fps
	CBR/VBR	Support
	Built-in Mic	Support
	Audio compression standard	ADPCM, G.711A, G.711U
Network	Maximum Image	1280x720
	Frame	30FPS
	Image Setting	Chroma, contrast, saturation and sharpness
	Protocol	HTTP, TCP , ARP, RTSP, UDP, RTCP, SMTP, DHCP, DNS, DDNS, PPPoE, IPV4, UPnP, NTP
	ONVIF	Support
	Client Terminal Preview	Built-in web server, IE browser
Interface	Audio Input	Support
	POE	Support
	Storage	Client Terminal / MDVR
Physical Characteristic	Power Supply	PON(DC12V)/POE(DC48V)
	Power	<2w (Day), <4w (Night)
	Waterproof Rating	IP66 (IP65 with audio)
	Working temperature	-40℃~70℃ / -40℉~158℉
	Working humidity	0% to 90%
	Dimension (L x W x H)	93mm x 90mm x 80mm / 3.661” x 3.543” x 3.150”

© 2015-2016 ViPRO Corporation
Data subject to change without prior notice.

N62
720P Mobile IP Camera

www.vipro.com.tw

N62 is the Outdoor IP camera specially designed for vehicle monitoring environment with high-speed processor and embedded operation system, combining H.264 video compression and decompression technology, network technology. Featuring high-definition (1280x720) image quality, N62 supports triple streams for better network transmission while its smart design is very convenient for installation and maintenance.

Key Features

- Support 1280x720@30fps HD resolution
- Day/Night(ICR), Digital Noise Filter, Super Wide Dynamic Range, Auto White Light Compensation
- High speed, long distance real time transmission
- Three stream technology, phone monitoring
- IP66 waterproof and dustproof
- Anti-vibration, vandal resistant
- Built-in power loss protection
- PON(DC 12V)/POE(48V)
- H.264 audio and video coding standard
- Support multiple network protocols
- Ideal for vehicle video surveillance

Dimension

(unit: mm)

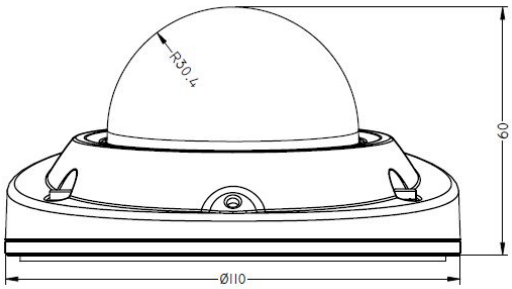

Application

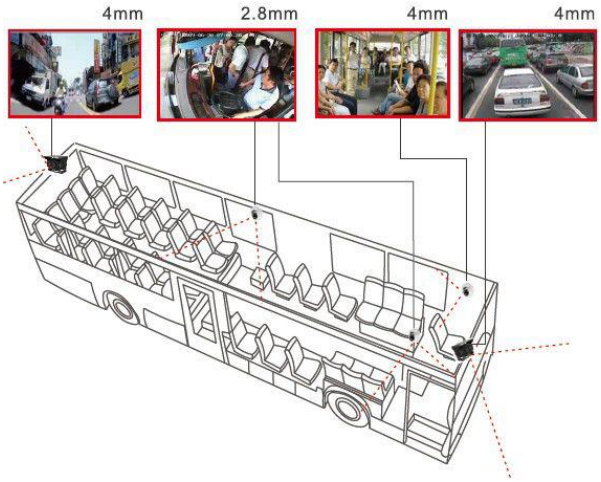

Technical Specifications

Product series	720P Mobile IP Camera	
	Model name	N62
Video	Image Sensor	1/3” CMOS SONY IMX238
	Resolution	1280(H)x720(V)
	Signal System	50/60 Hz
	Minimum Illumination	0.05Lux(Color Illumination), F1.2
	Electronics Shutter	1/25 Sec – 1/10000 Sec
	Day/Night	IR-CUT
	Wide Dynamic Range	Digital Wide Dynamic Range
	Backlight Compensation	Support
	S/N	≥40db
	Wide Dynamic Range	≥80db
	IR	<8m
Optical Lens	Port	6-pin DJ M12(PON)/RJ45(POE)
	Aperture	Fixed aperture F1.8
	Lens	2.8mm, 4mm, 6mm, 8mm Optional
Audio/Video Encode	Video Compression	H.264
	Compression Output Rate	768Kbps-6144Kbps
	Image Resolution	Main Stream:720p @30fps, Network Sub Stream:VGA @25fps Record Sub Stream:VGA @ 30fps
	CBR/VBR	Support
	Built-in Mic	Support
	Audio compression standard	ADPCM, G.711A, G.711U
Network	Maximum Image	1280x720
	Frame	30FPS
	Image Setting	Chroma, contrast, saturation and sharpness
	Protocol	HTTP, TCP , ARP, RTSP, UDP, RTCP, SMTP, DHCP, DNS, DDNS, PPPoE, IPV4, UPnP, NTP
	ONVIF	Support
	Client Terminal Preview	Built-in web server, IE browser
Interface	Audio Input	Support
	POE	Support
	Storage	Client Terminal / MDVR
Physical Characteristic	Power Supply	PON(DC12V)/POE(DC48V)
	Power	<2w (Day), <3.5w (Night)
	Waterproof Rating	IP66 (IP65 with audio)
	Working temperature	-40℃~70℃ / -40℉~158℉
	Working humidity	0% to 90%
	Dimension (L x W x H)	110mm x 110mm x 60mm / 4.331” x 4.331” x 2.362”

ViPRO © 2015-2016 ViPRO Corporation
Data subject to change without prior notice. | en, v11-01. Jan, 2015

N65
720P Mobile IP Camera

www.vipro.com.tw

N65 is the Outdoor IP camera specially designed for vehicle monitoring environment with high-speed processor and embedded operation system, combining H.264 video compression and decompression technology, network technology. Featuring high-definition (1280x720) image quality, N65 supports triple streams for better network transmission while its smart design is very convenient for installation and maintenance.

Key Features

- Support 1280x720@30fps HD resolution
- Day/Night(ICR), Digital Noise Filter, Super Wide Dynamic Range, Auto White Light Compensation
- High speed, long distance real time transmission
- Three stream technology, phone monitoring
- IP67 waterproof and dustproof
- Anti-vibration, vandal resistant
- Built-in power loss protection
- PON(DC 12V)
- Support multiple network protocols
- Ideal for vehicle video surveillance

Dimension

(unit: mm)

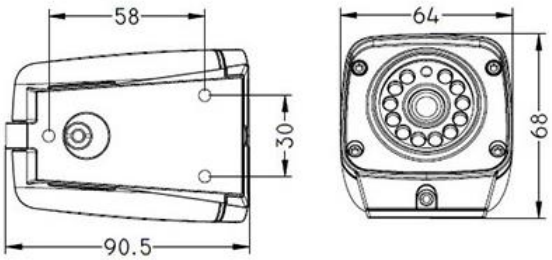

Application

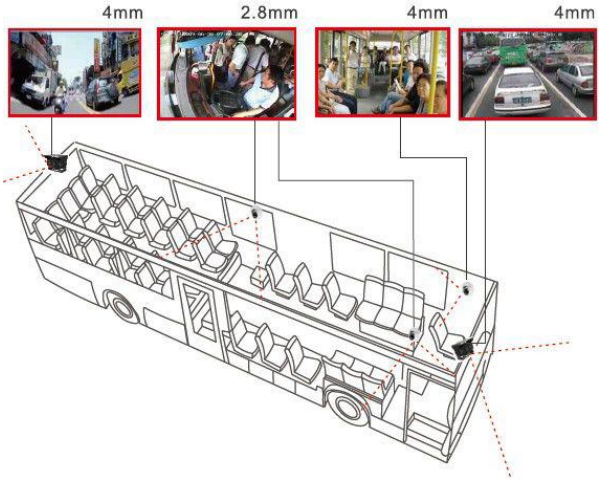

Technical Specifications

Product series	720P Mobile IP Camera	
	Model name	N65
Video	Image Sensor	1/3” CMOS SONY IMX238
	Resolution	1280(H)x720(V)
	Signal System	50/60 Hz
	Minimum Illumination	0.05Lux(Color Illumination), F1.2
	Electronics Shutter	1/25 Sec – 1/10000 Sec
	Day/Night	IR-CUT
	Wide Dynamic Range	Digital Wide Dynamic Range
	Backlight Compensation	Support
	S/N	≥40db
	Wide Dynamic Range	≥80db
	IR	<8m
Optical Lens	Port	6-pin DJ M12(PON)
	Aperture	Fixed aperture F1.8
	Lens	2.8mm, 4mm, 6mm, 8mm Optional
Audio/Video Encode	Video Compression	H.264
	Compression Output Rate	768Kbps-6144Kbps
	Image Resolution	Main Stream:720p @30fps, Network Sub Stream:VGA @25fps Record Sub Stream:VGA @ 30fps
	CBR/VBR	Support
	Audio compression standard	ADPCM, G.711A, G.711U
Network	Maximum Image	1280x720
	Frame	30FPS
	Image Setting	Chroma, contrast, saturation and sharpness
	Protocol	HTTP, TCP , ARP, RTSP, UDP, RTCP, SMTP, DHCP, DNS, DDNS, PPPoE, IPV4, UPnP, NTP
	ONVIF	Support
	Client Terminal Preview	Built-in web server, IE browser
Interface	Audio Input	Support
	POE	Support
	Storage	Client Terminal / MDVR
Physical Characteristic	Power Supply	PON(DC12V)
	Power	<2w (Day), <3.5w (Night)
	Waterproof Rating	IP67
	Working temperature	-40℃~70℃ / -40℉~158℉
	Working humidity	0% to 90%
	Dimension (L x W x H)	90.5mm x 68mm x 64mm / 3.563” x 2.677” x 2.520”

© 2015-2016 ViPRO Corporation

D55

Mini Dome Camera

www.vipro.com.tw

D55 *is the Mini Metal Dome Camera specially designed for public bus, school bus, passenger transport.The special structure (easy assembly and disassembly, lockable angle, anti-vibration), the advantages of anti-interference, low power consumption, and 24 IR Infrared LED for superior night vision make this dome camera ideal for vehicle surveillance.*

Key Features

- Metal Mini dome housing with fixed lens
- IP66 Water-proof & Vandal-proof
- Compact function for Shutter/Auto; BLC/Auto, AGC/Auto
- Dual Glass In Anti-reflection Design
- Lens Optional: 2.8/3.6/6.0mm for options
- Resolution: 600TVL/700TVL
- 24pcs leds, Night vision range 10~15m
- Easy installation on ceiling or wall, surface or flush mount
- High image quality and high low light performance
- Low power consumption

Dimension

(unit: mm)

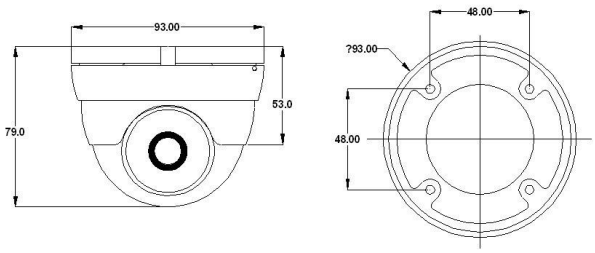

Package contains

- Camera x 1
- Instruction manual x 1
- Mounting screw x 3

Technical Specifications

Product series	Indoor Dome Camera
Model	D55
Imaging Device	1/3” Color SONY SuperHAD II CCD
TV System	NTSC/PAL
Effective Pixels (PAL/NTSC)	752(H) x 582(V) / 768(H) x 494(V)
Horizontal Resolution	600 TV lines
Minimum Illumination	0 Lux at F1.2 (Infrared LED on)
Scanning System	2:1 Interlace
Synchronization	Internal
S/N Ratio	≧ 50 dB (AGC off)
Auto Gain Control	Auto
White Balance	Auto
Electronic Shutter	Auto
Back Light Compensation	Auto
IR LED	24 LEDs with 850nm
IR night vision	10~15 meter
Video Output	1 Vp-p, 75Ω Composite
Audio	Optional
Mirror	N/A
Gamma Ratio	0.45
Lens	f2.8mm/3.6mm/6.0mm
Lens Mount	M12XP0.5mm Thread
Pan Adjusting	+/- 360°
Tilt Adjusting	0° ~ 45°
Input Voltage / Current	12V DC ±10%, 4 Pin Din
Power Consumption	310mA
Dimensions (W x H)	ø 54 x 43.4 mm / ø 2.126” x 1.709”
Net Weight	370g / 0.8157lbs
Weatherproof	IP66
Working Temperature	-25°C ~ +65°C / -13°F ~ +149°F
Working Humidity	RH90% Max.
Certification	CE, FCC

© 2015-2016 ViPRO Corporation

D57

Mini Dome Camera

www.vipro.com.tw

D57 *is the Mini Metal Dome Camera specially designed for public bus, school bus, passenger transport.The special structure (easy assembly and disassembly, lockable angle, anti-vibration), the advantages of anti-interference, low power consumption, and 12 IR Infrared LED for superior night vision make this dome camera ideal for vehicle surveillance.*

Key Features

- Metal Mini dome housing with fixed lens
- IP66 Water-proof & Vandal-proof
- Compact function for Shutter/Auto; BLC/Auto, AGC/Auto
- Dual Glass In Anti-reflection Design
- Lens Optional: 2.8/3.6/6.0mm for options
- Resolution: 600TVL/700TVL
- 12pcs leds, Night vision range 10m
- Easy installation on ceiling or wall, surface or flush mount
- Low power consumption

Dimension

(unit: mm)

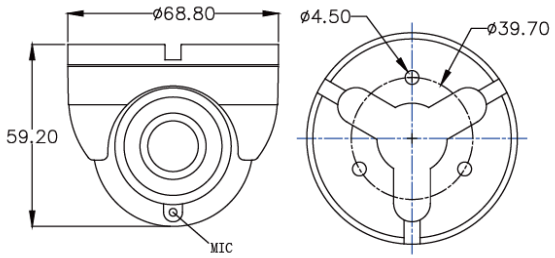

Package contains

- Camera x 1
- Instruction manual x 1
- Mounting screw x 3

Technical Specifications

Product series	Indoor Dome Camera
Model	D57
Imaging Device	1/3” Color SONY CCD
TV System	NTSC/PAL
Effective Pixels (PAL/NTSC)	752(H) x 582(V) / 768(H) x 494(V)
Horizontal Resolution	600 TV lines
Minimum Illumination	0 Lux at F1.2 (Infrared LED on)
Scanning System	2:1 Interla13
Synchronization	Internal
S/N Ratio	≧ 50 dB (AGC off)
Auto Gain Control	Auto
White Balance	Auto
Electronic Shutter	Auto
Back Light Compensation	Auto
IR LED	12 LEDs with 850nm
IR night vision	10 meter
Video Output	1 Vp-p, 75Ω Composite, BNC x 1
Audio	Optional
Mirror	Optional
Gamma Ratio	0.45
Lens	f2.8mm/3.6mm/6.0mm
Lens Mount	M12XP0.5mm Thread
View of Angle (D)	90°
Pan Adjusting	+/- 180°
Tilt Adjusting	0° ~ 90°
Input Voltage / Current	12V DC ±10%
Power Consumption	130mA
Dimensions (W x H)	ø 68.8 x 59.2 mm / ø 2.709” x 2.331”
Net Weight	180g / 0.3968lbs
Weatherproof	IP66
Working Temperature	-25°C ~ +65°C / -13°F ~ +149°F
Working Humidity	RH90% Max.
Certification	N/A

© 2015-2016 ViPRO Corporation
Data subject to change without prior notice. | en, v11-01. Jan, 2015

D58

Mini Metal Dome Camera

www.vipro.com.tw

D58 *is the Mini Metal Dome Camera specially designed for public bus, school bus, passenger transport.The special structure (easy assembly and disassembly, lockable angle, anti-vibration), the advantages of anti-interference, low power consumption, and 12 IR Infrared LED for superior night vision make this dome camera ideal for vehicle surveillance.*

Key Features

- Vehicle IR Day/Night Mini Metal Dome Camera
- IP67 Water-proof & Vandal-proof
- Compact function for Shutter/Auto; BLC/Auto, AGC/Auto
- Dual Glass In Anti-reflection Design
- Lens: 2.8/3.6/6.0mm for options
- Resolution: 600TVL/700TVL
- 12pcs leds, Night vision range 10m
- Easy installation on ceiling or wall, surface or flush mount
- Low power consumption

Dimension

(unit: mm)

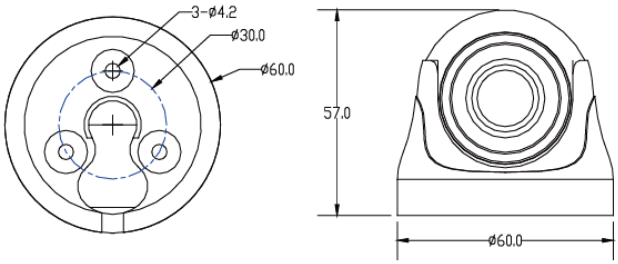

Package contains

- Camera x 1
- Instruction Manual x 1
- Mounting Screw x 3
- Mounting Plug x 3
- Rubber Ring x 1

Technical Specifications

Product series	Waterproof Dome Camera	
Model	D58	
Imaging Device	Next Chip 2090 + 1/3” Color SONY CCD	
TV System	NTSC/PAL	
Effective Pixels (PAL/NTSC)	752(H) x 582(V) 768(H) x 494(V)	976(H) x 582 (V) 976(H) x 494(V)
Horizontal Resolution	600 TV lines	700 TV lines
Minimum Illumination	0 Lux at F1.2 (Infrared LED on)	
Scanning System	PAL: 625TVL, NTSC: 525TVL (2:1 Interlace)	
Synchronization	Internal	
S/N Ratio	≧ 50 dB (AGC off)	
Auto Gain Control	Auto	
White Balance	Auto	
Electronic Shutter	Auto	
Back Light Compensation	Auto	
IR LED	12 LEDs with 850nm	
IR night vision	10 meter	
Video Output	1 Vp-p, 75Ω Composite, BNC x 1	
Audio	Optional	
Mirror	Optional	
Gamma Ratio	0.45	
Lens	f2.8mm/3.6mm/6.0mm fixed lens	
Lens Mount	M12XP0.5mm Thread	
View of Angle (D)	120°	
Pan Adjusting	+/- 180°	
Tilt Adjusting	0° ~ 90°	
Input Voltage / Current	12V DC ±10%	
Power Consumption	190mA	200mA
Dimensions (W x H)	ø 60 x 57 mm / ø 2.362” x 2.244“	
Net Weight	130g / 0.286lbs	
Ingress Protection	IP67	
Working Temperature	-25°C ~ +55°C / -13°F ~ +149°F	
Working Humidity	RH90% Max.	
Certification	N/A	

ViPRO © 2015-2016 ViPRO Corporation
Data subject to change without prior notice. | en, v11-01. Jan, 2015

DB50

Waterproof Mini Dome Camera

www.vipro.com.tw

DB50 *is the Mini Metal Dome Camera specially designed for public bus, school bus, passenger transport.The special structure (easy assembly and disassembly, lockable angle, anti-vibration), the advantages of anti-interference, low power consumption, and audio band-pass filter make this dome camera ideal for vehicle surveillance.*

Key Features

- Metal-cased IP67 weatherproof micro dome
- Low power consumption
- Easy installation on ceiling or wall, surface or flush mount
- With fixed lens (3.6mm&6.0mm for options)
- 10 Infrared LEDs, vision range 5~8 meter
- 0°/10°/25° angled surface mount adaptor (optional)
- Anti-vibration, vandal resistant
- Ideal for vehicle video surveillance

Dimension

(unit: mm)

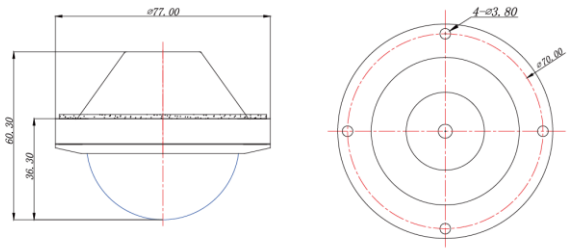

Package contains

- Camera x 1
- Instruction manual x 1
- Hex-key x 1
- Mounting screw x 4

Technical Specifications

Product series	Outdoor Dome Camera
Model	DB50
Imaging Device	1/3” Color SONY CCD
TV System	NTSC/PAL
Effective Pixels (PAL/NTSC)	752(H) x 582(V) / 768(H) x 494(V)
Horizontal Resolution	600 TV lines
Minimum Illumination	0 Lux at F1.2 (Infrared LED on)
Scanning System	2:1 Interlace
Synchronization	Internal
S/N Ratio	≧ 50 dB (AGC off)
Auto Gain Control	Auto
White Balance	Auto
Electronic Shutter	Auto
Backlight Compensation	Auto
IR LED	10 LEDs with 850nm
IR night vision	5 ~ 8 meter
Video Output	1 Vp-p, 75Ω Composite
Audio	available
Mirror	Optional
Gamma Ratio	0.45
Lens	f3.6mm/6.0mm(optional) fixed iris lens
Lens Mount	M12XP0.5mm Thread
Pan Adjusting	+/- 180°
Tilt Adjusting	0° ~ 62°
Input Voltage / Current	12V DC ±10%
Power Consumption	210mA
Dimensions (W x H)	ø 77 x 60.3 mm / ø 2.756” x 2.374”
Net Weight	200g / 0.4409lbs
Weatherproof	IP67
Working Temperature	-10°C~ +50°C / 14°F ~ +122°F
Working Humidity	RH90% Max.
Certification	CE, FCC

© 2015-2016 ViPRO Corporation
Data subject to change without prior notice. | en, v11-01. Jan, 2015

DB51

Mini Metal Dome Camera

www.vipro.com.tw

DB51 *is the Mini Metal Dome Camera specially designed for public bus, school bus, passenger transport.The special structure (for wall and in-ceiling mount), automatic shutter control amd white balance and low power consumption make this dome camera ideal for vehicle surveillance.*

Key Features

- Metal-cased IP67 weatherproof micro dome
- For Wall and In-ceiling Mount
- 1/3” Colour Board Camera with Super HAD II CCD
- Integrated lens F2.0/3.6mm
- Resolution: 480/600/700TV lines
- 10 Infrared LEDs, vision range 10 meters
- Low power consumption
- Automatic Shutter Control up to 1:100,000Sec
- Digital Signal Processing (DSP)
- Automatic White Balance (ATW)
- Anti-vibration, vandal resistant
- Silver-coloured Aluminium Casing

Dimension

(unit: mm)

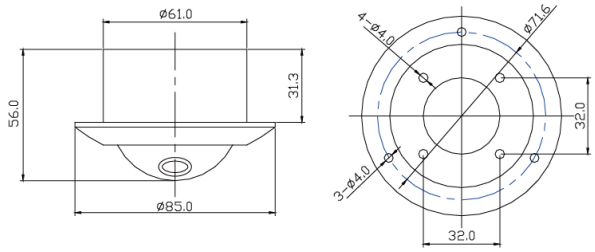

Package contains

- Camera x 1
- Instruction manual x 1
- Mounting plug x 3
- M3.5 self-tapping screw x 3

Technical Specifications

Product series	Indoor Dome Camera	
Model	DB51	
Imaging Device	1/3” Color SONY Super HAD II CCD	
TV System	NTSC/PAL	
Effective Pixels (PAL/NTSC)	752(H) x 582(V) 768(H) x 494(V)	960(H) x 582(V) 976(H) x 494(V)
Horizontal Resolution	600 TV lines	700 TV lines
Minimum Illumination	0 Lux at F1.2 (Infrared LED on)	
Scanning System	2:1 Interlace	
Synchronization	Internal	
S/N Ratio	≧ 50 dB (AGC off)	
Auto Gain Control	Auto	
White Balance	Auto	
Automatic Shutter (AES)	1/50~1/100,000sec	
Back Light Compensation	Auto	
Aperture Correction (APC)	Horizontal and Vertical	
IR LED	10 LEDs with 850nm	
IR night vision	5 ~ 8 meter	
Video Output	1 Vp-p, 75Ω Composite, BNC x 1	
Audio	Optional	
Mirror	Optional	
Gamma Ratio	0.45	
Lens	F2.0/f3.6mm (2.8/6.0mm optional)	
Camera adjustment	3-axis camera adjustment: 360° horizontal rotation / 0-40° tilt rotation, 360° pan rotation	
Exterior Focus Adjustment	N/A	
Lens Mount	M12XP0.5mm Thread	
Viewing Angle (D)	110°	
Mounting	flush mount, wall mount	
Housing material	Aluminium	
Input Voltage / Current	12V DC ±10%	
Power Consumption	80mA	
Dimensions (W x H)	ø 85 x 56 mm / ø 3.346” x 2.205”	
Net Weight	130g / 0.2866lbs	
Weatherproof	IP67	
Working Temperature	-10°C~ +50°C / 14°F ~ +122°F	
Working Humidity	RH90% Max.	
Certification	CE	

© 2015-2016 ViPRO Corporation
Data subject to change without prior notice. | en, v11-01. Jan, 2015

DB52

Mini Metal Dome Camera

www.vipro.com.tw

DB52 *is the Mini Metal Dome Camera specially designed for public bus, school bus, passenger transport.The special structure (easy assembly and disassembly, lockable angle, anti-vibration), the advantages of anti-interference, low power consumption and wide-angle lens make this dome camera ideal for vehicle surveillance.*

Key Features

- Metal-cased IP66 weatherproof micro dome with fixed lens (2.2mm)
- Low power consumption
- Fish-eye lens
- Availabe in silver finish
- 8-18V DC power input
- Easy installation on ceiling or wall, surface or flush mount
- Optional standard surface mount adaptor
- Anti-vibration, vandal resistant
- Ideal for vehicle video surveillance

Dimension

(unit: mm)

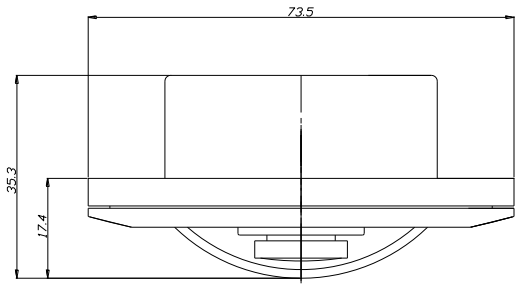

Package contains

- Camera x 1
- Instruction manual x 1
- Hex-key x 1
- Mounting screw x 4
- Mounting plug x 4

Technical Specifications

Product series	Outdoor Dome Camera
Model	DB52
Imaging Device	1/3” Color SONY CCD
TV System	NTSC/PAL
Effective Pixels (PAL/NTSC)	752(H) x 582(V) / 768(H) x 494(V)
Horizontal Resolution	600 TV lines
Minimum Illumination	0.1 Lux at F1.2
Scanning System	2:1 Interlace
Synchronization	Internal
S/N Ratio	≧ 50 dB (AGC off)
Auto Gain Control	Auto
White Balance	Auto
Electronic Shutter	Auto
Back Light Compensation	Auto
IR LED	N/A
IR night vision	N/A
Video Output	1 Vp-p, 75Ω Composite BNC Jack
Audio	Optional
Mirror	Optional
Gamma Ratio	0.45
Lens	f2.2mm wide-angle lens
Exterior Focus Adjustment	N/A
Lens Mount	M12XP0.5mm Thread
Pan Adjusting	+/- 180°
Tilt Adjusting	0° ~ 50°
Input Voltage / Current	8V – 18V DC
Power Consumption	80mA
Dimensions (W x H)	ø 74.6 x 58.3 mm / ø 2.937” x 2.295”
Net Weight	130g / 0.2866lbs
Weatherproof	IP66
Working Temperature	-10°C~ +50°C / 14°F ~ +122°F
Working Humidity	RH90% Max.
Certification	N/A

© 2015-2016 ViPRO Corporation
Data subject to change without prior notice.

ViPRO
Din-Aviation Extension Cable

www.vipro.com.tw

ViPRO Mobile DVRs adopt the din-aviation connector, supporting 4 pins including video, audio, ground and power, which symbolizes that the MDVR can provide the power for the cameras. Din-aviation connector is the professional one for security products especially under the strong vibration condition. In certain content, this connector is waterproof and the connection is very strong to avoid the loose after long time usage and vibration.

These din-aviation extension cables are used for Mobile DVR installation in the vehicle. As customers install the cameras (with din-aviation connector as well) in different location, the different length cable are required. The din aviation cables are available in different length.

Key Features

- Professional din-aviation connector for security products
- 4 pins (video/audio/ground/power) can provide the power for cameras
- The shielding cable which can avoid the external signal interference
- Different lengths

Technical Specifications

Product series	Din-Aviation extension cable
Connection	Din-aviation
Connector Material	Male connector: metal
	Female connector: Metal and plastic
Cable	Shielding cables (4 cables inside with different signal: video, audio, ground, power)
Cable Length(Meters)	1.5 M, 3M, 5M, 7M, 9M, 11M, 13M, 15M
Voltage Input	+12 input
Cable Diameter	6.5mm

Dimension and Pin Definition

Female definition

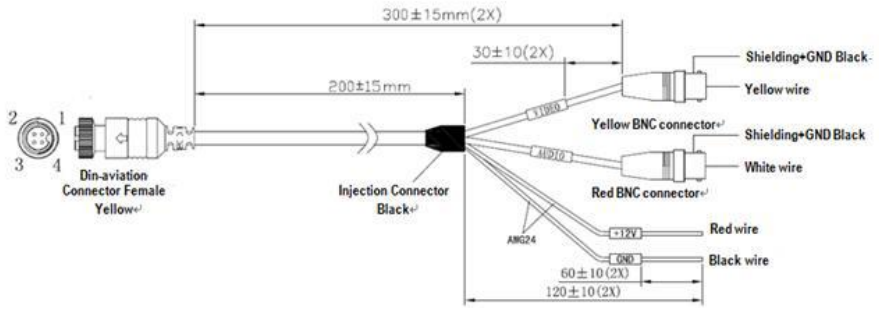

Male definition

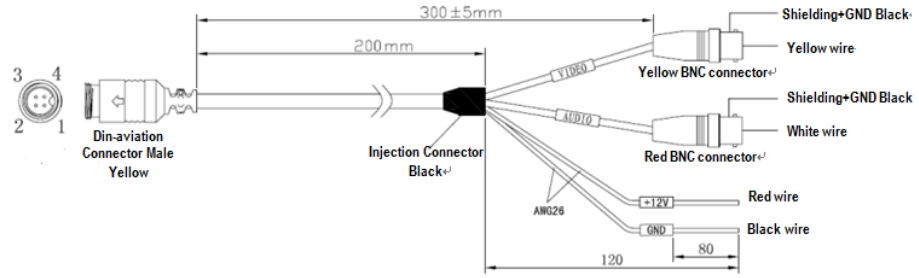

The Definition for 4 PINS:

Female **Male**

Pin 1: +12V…….Pin 1 red

Pin 2: GND……. Pin 2 black shielding network

Pin 3: AUDIO……..Pin 3 white shielding cable

Pin 4: VIDEO……..Pin 4 yellow shielding cable

The cable specification:

[(TS0.16*17/1.4+TS0.10*64 braided lines)*2C+TS0.16*17/1.4+3 cotton +AL]/7.0

The connector Specification:

RS765-12. 4 pins female and male connector

© 2015-2016 ViPRO Corporation
Data subject to change without prior notice.

Serial Expansion Box

Serial Expansion Box integrates the interface of RS-232 and RS485 to realize the serial communication between external device and Mobile DVR. As Mobile DVR's optional peripheral, it can expand the function of MDVR and integrate more peripherals.

Key Features

- Excellent deviation stability
- High sensitivity & high reliability
- Two RS-232 interfaces, to connect the automobile station reporter or the other external devices
- Two RS-485 interfaces, can be use to connect the PTZ, Inertia Sensor, control panel or the other external devices
- Simple wiring
- Overall aesthetic

Technical Specifications

Product series	Serial Expansion Box
Interface type	1x RS232 input, small 5557 connector (connecting with MDVR)
	2x RS232 output, small 5559 connector (connecting with external device)
	2x RS485 output, small 5559 connector (connecting with external device)
Working Temperature	-30℃~ +75℃ / -22℉~ +158℉
Storage Temperature	-40℃~ +85℃ / -40℉~ +185℉
Relative Humidity	<95%
Cable Length	400mm
Weigth	0.08kg
Applied models	MVR-210, MVR-215, MVR-315, MNR-360

Diagram

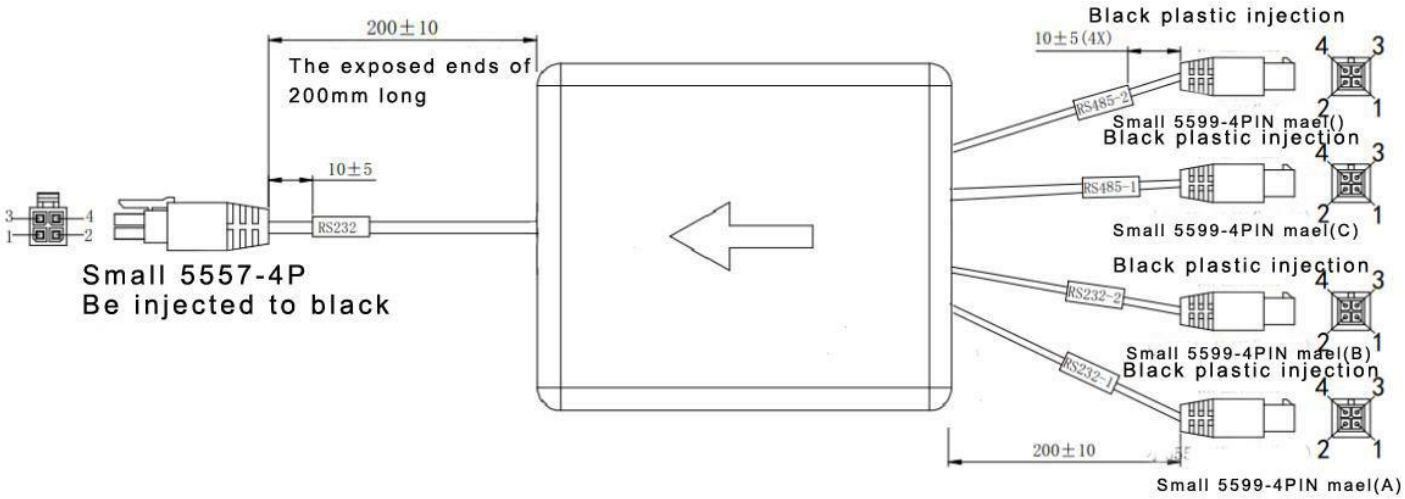

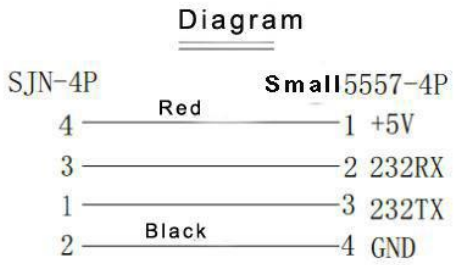

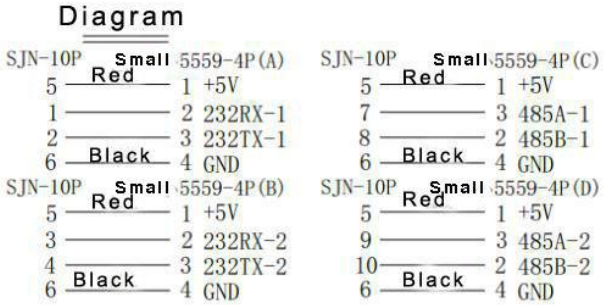

© 2015-2016 ViPRO Corporation
Data subject to change without prior notice.

CP4

7” Multi-function Control Panel

www.vipro.com.tw

CP4 is a Multi-functional Control Panel used for bus intelligent dispatch system. Integrated with 18 buttons and 7” large screen display, CP4 can access Mobile DVR GUI for system configuration and check the video in QUAD view or full-screen from each camera. Incorporating SMS and voice broadcast features, CP4 can realize the functions of speaking inside/outside of the vehicle, IP connection and making calls. When the driver reverses the bus, it automatically switches from normal recording to the reversing live view. It is widely applied to domestic and overseas bus systems for its easy installation, powerful features and convenient operation.

Key Features

- 7 inches touch screen display
- Support MDVR diagnosis and operation
- Built-in speakers
- Built-in RFID module to sign in/out
- Resolution 800x480
- Station announcement (manually and automatically)

Dimensions (unit: mm)

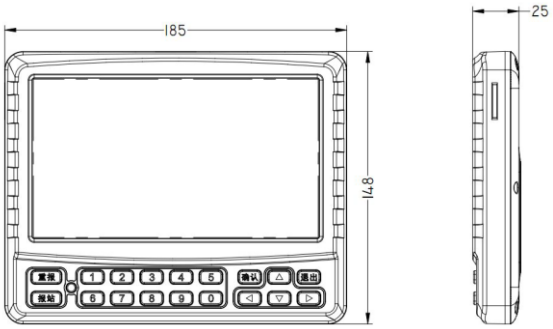

Bracket Installation (3 brackets for selection)

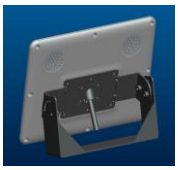

For flat console

For Curved Console

For Hanging

Technical Specifications

Product series	Model	CP4 (7” Multi-functon Control Panel)
Item	Parameter	Peformance Index
Screen	Sceen Type	LCD screen
	Touch Type	4 wire resistor type
	Size	7 inches
	Resolution	800x480
	Luminance	400cd/m2
	Aspect Ratio	16:9
	Contrast Ratio	20.83402778 (In suitable brightness condition, the higher contrast, the richer color levels)
	Response Time	10/15(Tr/Td) ms
	Viewing Angle	L/R: 70/70 U/D: 50/70 (Typ.) (CR dot 10)
	Max. Display Color Number	262K/16.7M(6bit/6bit+Dithering)
	Back-light Type	Whilte LED
	Button & Screen Distribution	Combined
Material	Panel material	70% PC + 30% ABS Engineering plastics
	Button material	Silicone
Built-in Module	RFID Wipe Card Module	13.56 MHZ for driver to sign in and sign off.
	Speaker	Speaker(16Ω, 2W)x2
Interface	MDVR Interface	Connects to ViPRO MDVR
	CAM Interface	Yellow 4PIN aviation-din connector, connects to reversing camera
	MIC Interface	Connects to the driver megaphone
	Sensor Interface	Yellow hanging line, reversing signal detection port, high level effective. To monitor control for reversing.
Button	Function Buttons	Restate/ Station announcer/ Arrow Keys/ Confirmation/ Exit
	Number Buttons	0-9
Installation	Tile Installation	Refer to mounting bracket
	Bracket Installation	Three brackets with hood
Dimension	L x W x H	185 x 128 x 34.9mm / 7.28” x 5.03” x 1.37”
Operation Paramter	Operating Voltage	12V
	Operating Current	200mA
	Total Power Consumption	2.4W
Environment	Ingress Protection	IP53
	Operating Temperature	-20℃~+70℃ / -4℉~158℉
	Relative Humidity	8%~90%

Pin Illustration	Connector	Function	Definition
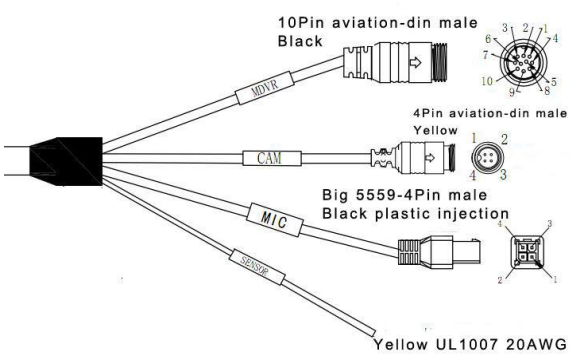	MDVR	Black 10PIN aviation-din male connector connects to ViPRO MDVR.	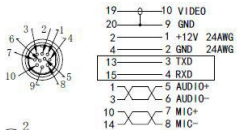
	CAM	Yellow 4PIN aviation-din connector connects to reversing camera.	
	MIC	Connects to driver microphone.	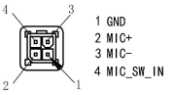
	SENSOR	Yellow hanging line, reversing signal detection port, high level effective. For reversing control.	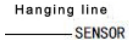

© 2015-2016 ViPRO Corporation

ViPRO
Green Driving System (GDS)

www.vipro.com.tw

Green Driving System, known as GDS, has integrated six-axis sensor and OBD II/EOBD together to have the following features: driving data pre-alarm, vehicle condition checking, driving behavior and oil consumption management. On-Board Diagnostics, also known as OBD, is used to monitor the vehicle condition according to the operating conditions of the engine.

Key Features

- Data Management
  Collect data of OBD II and six-axis sensor to manage oil consumption, speed, maintenance and driving behavior
- Data Analysis
  Collect data of OBD II and six-axis sensor to calculate oil consumption, speed, mileage, driving period and behavior
- Fault Diagnosis
  Collect data of OBD II fault Analysis, pre-alarm and calculation
- Alarm Information
  Collect data of OBD II and six-axis sensor to alarm the vehicle fault and driving behavior

Technical Specifications

Product series	Green Driving System (GDS)
Vehicle type	12V/24V Diesel Vehicle / Gasoline Vehicle
Data type	K line, CAN ISO 11898/ ISO15765-4 high speed, intermediate speed and low speed CAN, RS485
Working Voltage	5V
Acceleration	±16g
Angular Rate	±2000°/sec
Working temperature	-40°C～70°C
Storage temperature	-40°C～85°C
Wire Length	1050mm
Weight	160g
Dimension	75mm*75mm*34mm

Dimension

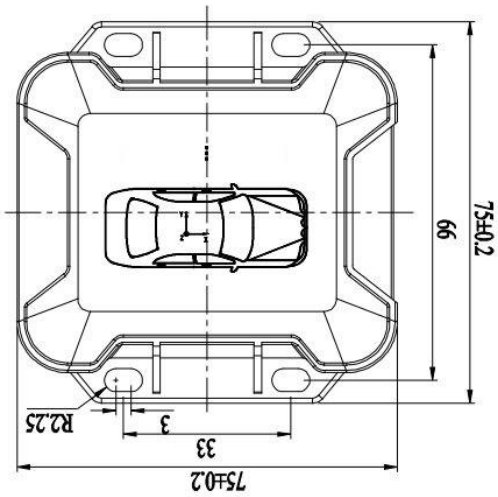

Front Panel

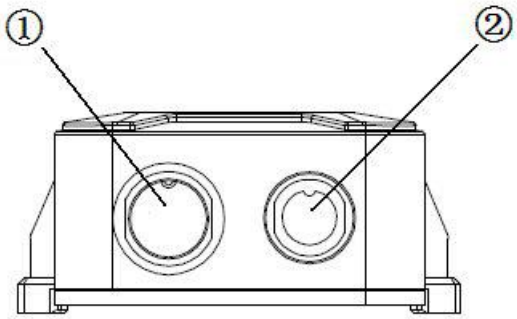

Serial No.	Description
①	To connect OBD port
②	To connect GDS displaying panel and MDVR

© 2015-2016 ViPRO Corporation
Data subject to change without prior notice. | en, v11-01. Oct 2015

External Cable Dimension

8-pin Aviation Male YL 16-8

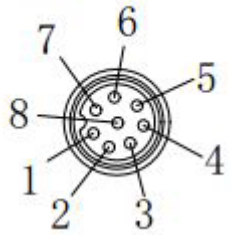

Serial No.	Description
1	J1708-
2	J1708+
3	CAN-L
4	CAN-H
5	GND
6	L-LINE
7	K-LINE
8	+24V

Male RS765-6

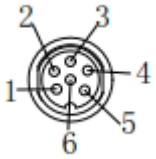

Serial No.	Description
1	RS232X
2	GND
4	RS232TX
5	+5V
6	RS485A
7	RS485B

Installation illustration

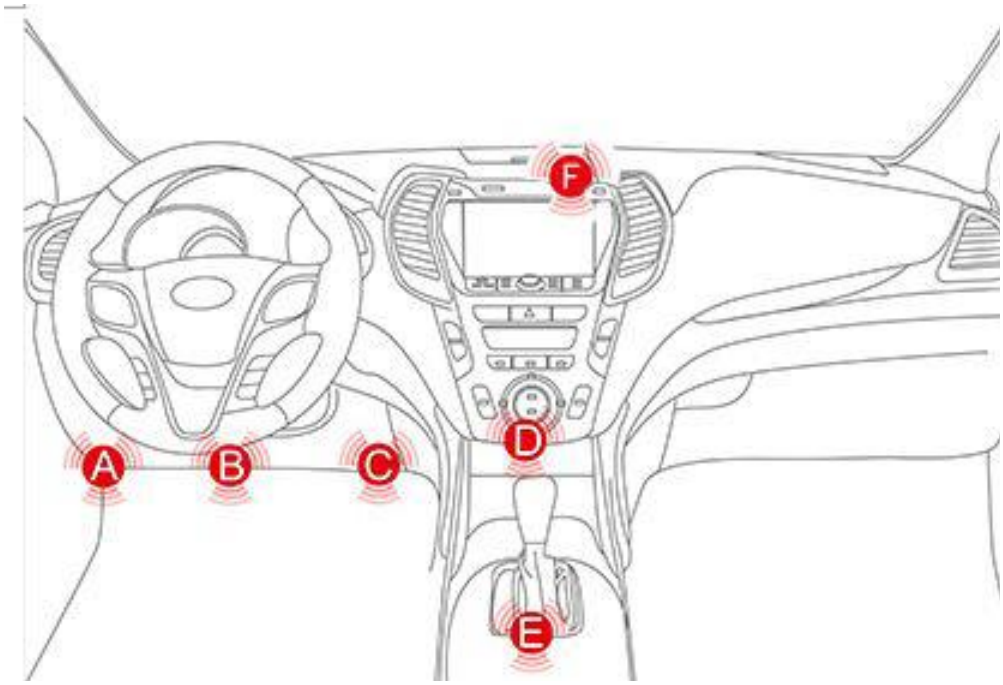

© 2015-2016 ViPRO Corporation
Data subject to change without prior notice.

Fireproof Box

Mirror recording means that the SD card and hard disk recording at the same time with the same configuration (frame rate, image quality, and resolution). ViPRO Mobile DVR system can provide 2 different mirror recording functions. One is internal mirror recording (the SD card slot is inside of the MVR device) and another one is external mirror recording by Fireproof Box. This Fireproof Box is specially designed for anti-fire and anti-explosure to protect the video files in the last minutes for the accidents (for example: if the bus is on fire).

Key Features

- USB interface realizes external mirror recording easily
- Rugged shell, effective protect the data security
- Professional developed, industrial-level SD Card inside
- Super resistance to high temperature: able to protect the SD Card for 20 minutes in 500°C
- Waterproof, dustproof and explosive Proof
- Small size and easy installation

Technical Specifications

Product series	Fireproof Box
SD card Capacity	Standard SD card 32GB or 64GB
SD Card speed	CLASS 10
Stand Fire Performance	Able to protect the SD card for 20 minutes in 500℃
Record Mode	Mirror Recording external
Interface	USB2.0
Material Internal	Nanometer Material
Material External	Steel
Protection Level	IP65
Wire Length	300mm
Weight	2KG
Dimension	146mm*124mm*88mm

Dimension

(unit: mm)

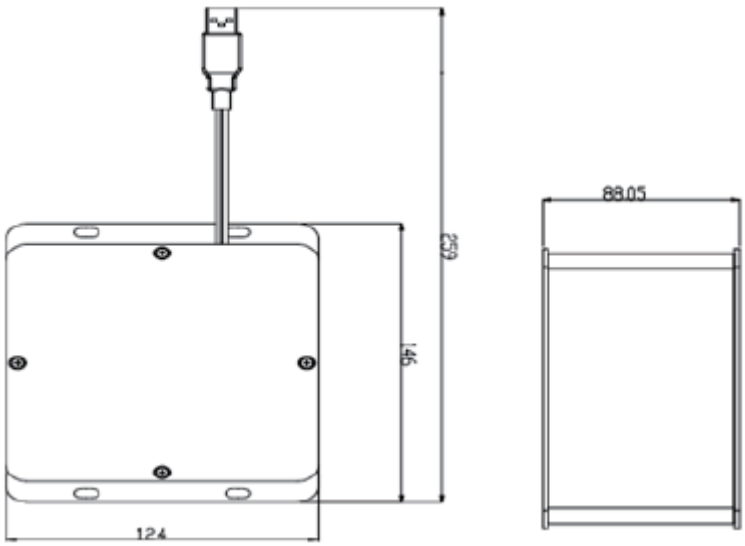

© 2015-2016 ViPRO Corporation
Data subject to change without prior notice.

Smart Switch

- ✓ **POE power supply**
- ✓ **Plug and play**
- ✓ **IP54 Waterproof and dust-proof**
- ✓ **Wide voltage input: DC8-36V**

Key Features

Smart Switch integrates power and data onto one single cabling infrastructure, eliminating the need for extra power wire. Simply connect any network cable between the switch and the device, and the switch will automatically detect the settings of the device and adjust itself accordingly.

When the system power is overloaded, it will help protect the system by disabling the POE function of lower priority POE ports to maintain the power to higher priority POE ports. This cost-effective Smart Switch provides an ideal solution to most kinds of local area network congestion problems.

Product Panels

Front Panel

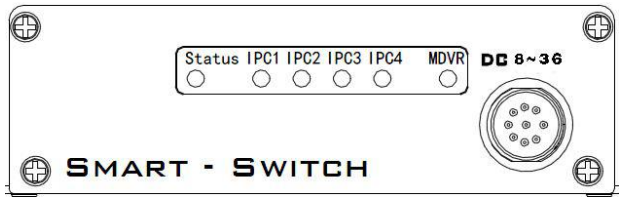

Rear Panel

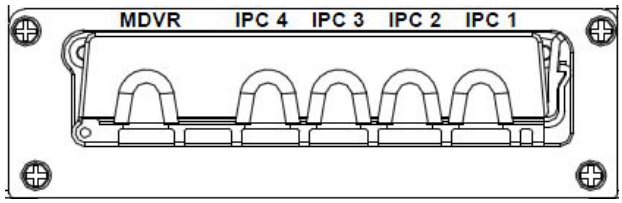

Technical Specifications

Product series	Smart Switch	
Video	IPC Channel	4 channels
	Interface	RJ45 (10M/100M)
	IPC Power Supply	POE
Power	Interface	M12 (9 Pin)
	Power Input	DC 8 – 36V
	Power Standard	ISO 7637-2
Network	Port	RJ45 (10M/100M)
Status	LED	6PCS (The yellow light is about power status, while the green lights (5pcs) are about network working status.
Dimension	(L x W x H)	149 x 100 x 38mm 5.86” x 3.93” x 1.49”
Temperature	Working	-40℃~70℃/ -40℉~158℉
	Storage	-40℃~80℃/ -40℉~176℉
Ingress level	IP54	
Certifications	MIL-STF-810F	

© 2015-2016 ViPRO Corporation
Data subject to change without prior notice.

Uninterrupted Power Supply

UPS is a high-performance back-up power solution, using internal electronic circuit to measure, calculate and storage battery data, which makes the use and management of power supply more predictable.

It solves the problem of high and low voltage pulse and can keep on recording, avoiding the interference of Mobile DVR on vehicles. 4 stage charging, bulk-absorption-float-storage. There is protection for low pressure / over-voltage, overload, over current, over temperature, short circuit, and reverse polarity.

Key Features

- Compact appearance, light weight
- Built-in fuse, ensure reliability and security
- Seamless connection with Mobile DVR
- Last for about 40 minutes when the vehicle is cut off power

Dimensions (unit: mm)

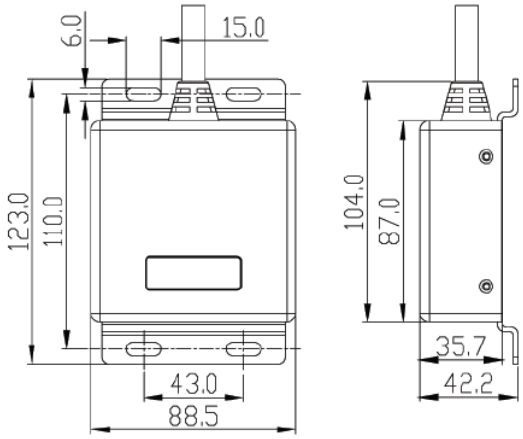

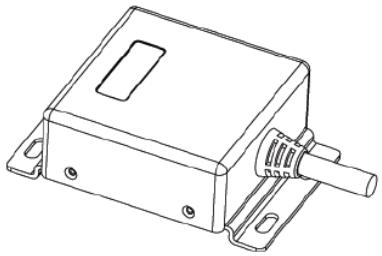

Technical Specifications

Product series	UPS (Uniterrupted Power Supply)
Type	LFP
Input Voltage	8~36V
Output Voltage	9.6V
Capacity	2000mAh
Max. Charging Voltage	10.5V
Charging Current	0.2C
Charging Time	5~6 hours
Charging Protection	Auto recover
Over currents Protection	Auto recover
Short Circuit Protection	Yes
Weight	650g /
Dimension	123 x 88 x 42mm /
Working Temperature	-10℃~60℃ /
Storage Temperature	-40℃~85℃ /
Cycle Life	2000 times ≧70% power capacity

© 2015-2016 ViPRO Corporation
Data subject to change without prior notice.